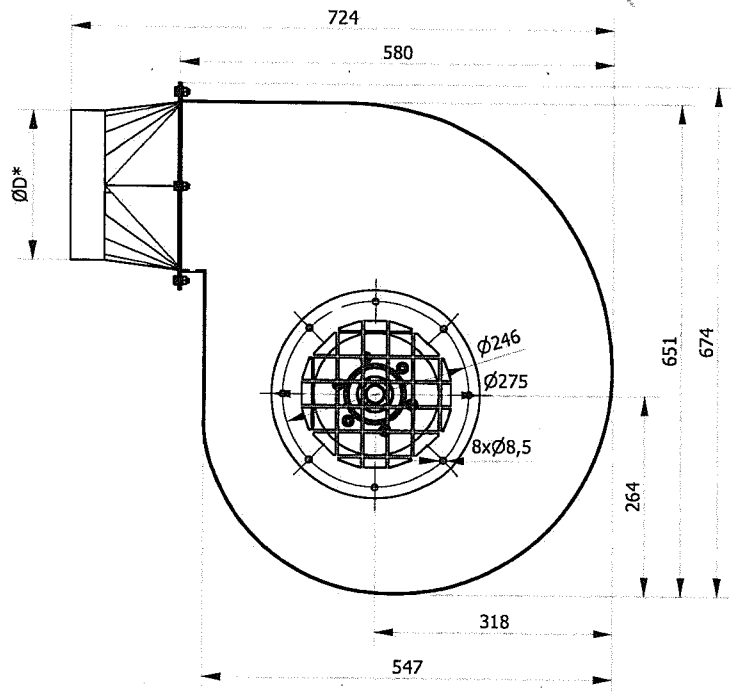

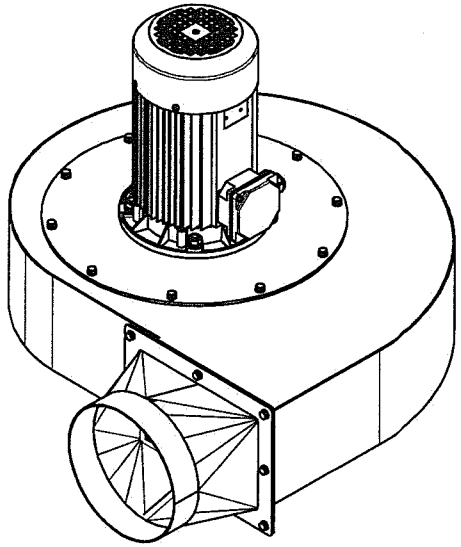

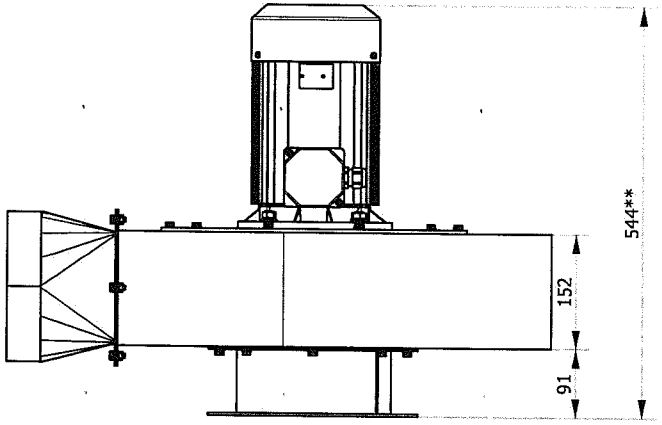

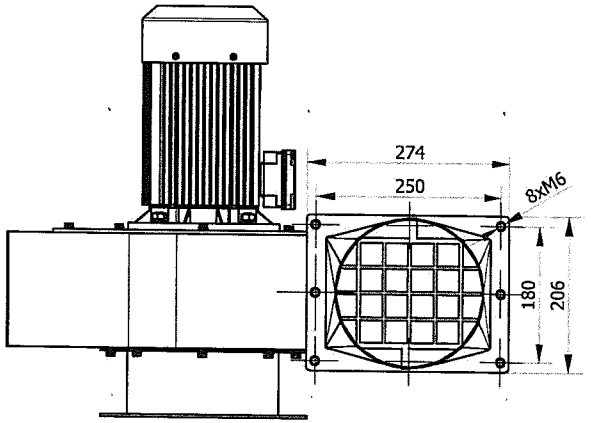

105204 ZWR-05 fan

Construction:

- Radial fan
- Dynamically balanced aluminium impeller
- Impeller mounted directly on motor shaft
- Steel, welded and powder coated construction
- Inlet and outlet safety grates

Notes:

* Nominal diameter

** Overall height can differ depending on configuration and motor supplier

The method of packing and carton sizes:

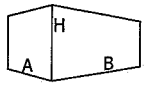

A = 715
B = 635
H = 630
weight brutto = 50 kg

All dimensions are in mm

Available configurations - parameters

Index	Power [kW]	No. of phases	Voltage [V]	Frequency [Hz]	Rotation speed [rpm]	D* [mm]	Rated current [A]	Maximal airflow [m³/h]	Maximal pressure [Pa]	Noise level [dB(A)]	Maximal operation temperature [°C]
105204-000	2,2	3	400	50	2800	200	4,5	3000	2480	80	40
105204-100	2,2	1	230	50	2800	200	13,2	3000	2480	80	40
105204-400	2,2	3	460	60	3360	200	2,5	3600	3550	82	40
105204-800	2,2	3	230/460	60	3360	200	9,0/4,5	3600	3550	82	40

Fan performance curve

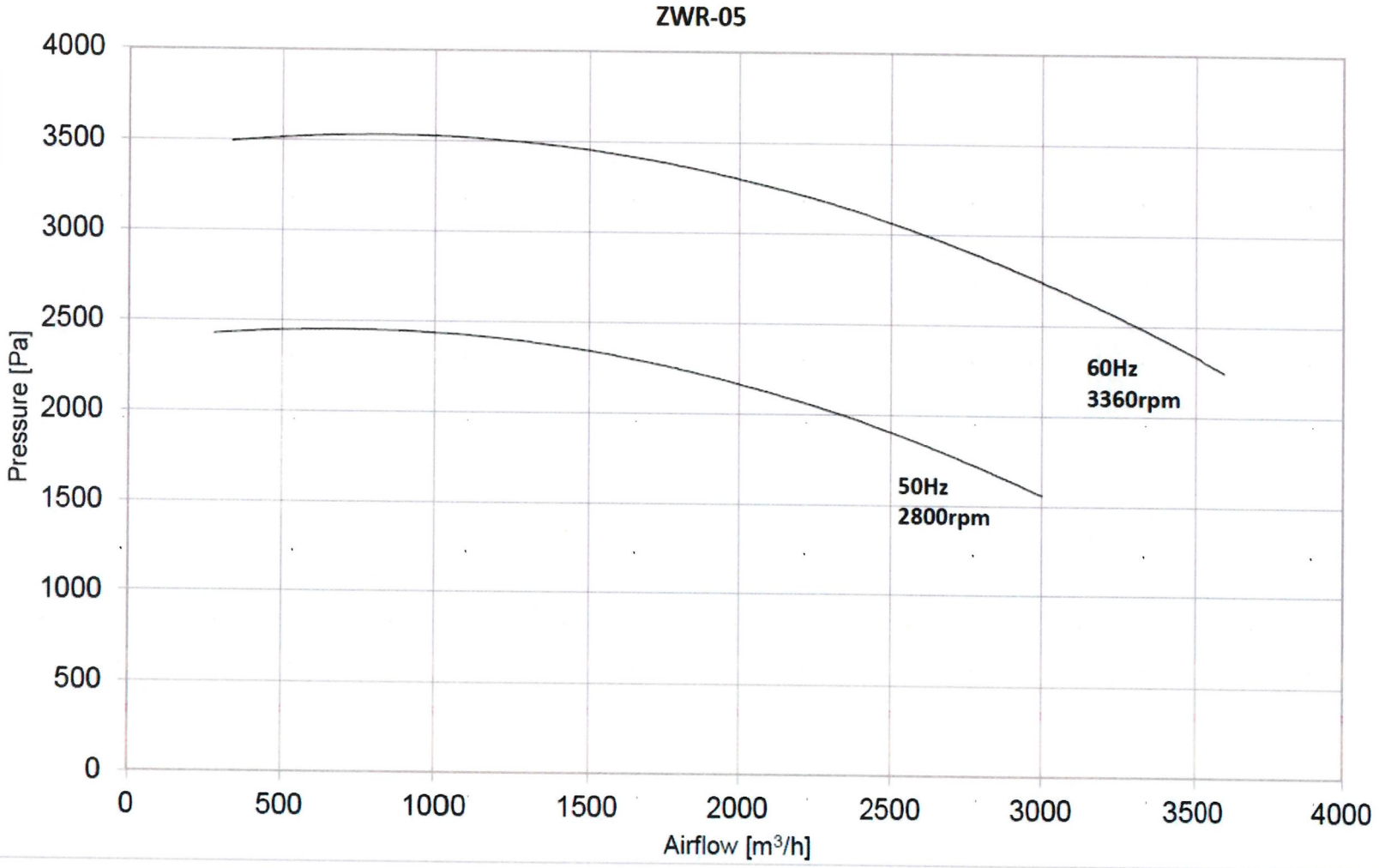

105204 ZWR-05 fan

Construction:

- Radial fan
- Dynamically balanced aluminium impeller
- Impeller mounted directly on motor shaft
- Steel, welded and powder coated construction
- Inlet and outlet safety grates

Notes:

The method of packing and carton sizes:

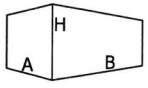

A = 715
B = 635
H = 630
weight brutto = 50 kg

All dimensions are in **mm**